REV.	DESCRIPTION	ECN NO.	NAME	DATE
1	NEW FRAME	N/A	ZXH	2020-07-20

RoHS

ALL PARTS MUST MEET TO RoHS REQUIREMENTS

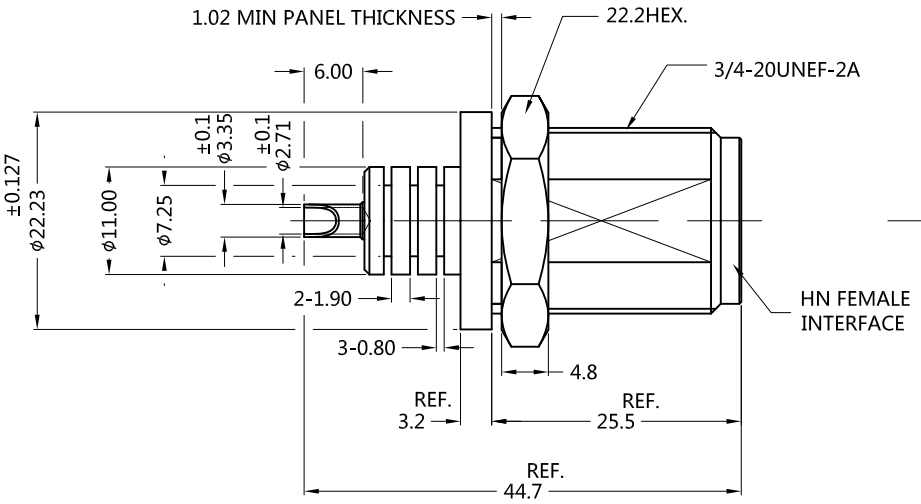

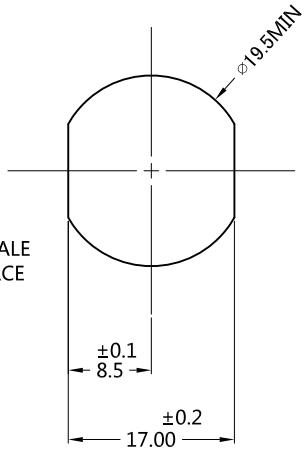

RECOMMENDED MOUNTING HOLE

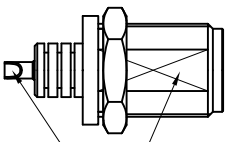

ACROSS FLATS&CONTACT MUST BE ORIENTED WITHIN±2° WITH RESPECT TO EACH OTHER AS SHOWN

MATERIALS AND PLATING UNIT: MICRO-INCHES

PART NAME	MATERIALS	PLATING
BODY	BRASS C3604	NICKEL 100u" PLATED
INSULATOR	TEFLON MIL-P-19468	N/A
CONTACT PIN	BERYLLIUM COPPER	SILVER 100u" PLATED

ELECTRICAL CHARACTERISTICS

IMPEDANCE		50 Ω
VOLTAGE RATING		1000 V(rms)
FREQUENCY RANGE		0～4 GHz
DIELECTRIC WITHSTANDING VOLTAGE		5000 V
CONTACT RESISTANCE	CENTER CONTACT	<1.5 mΩ
	OUTER CONTACT	<1.0mΩ
INSULATION RESISTANCE		>5000 MΩ
INSERTION LOSS		N/A
VSWR		N/A

MECHANICAL CHARACTERISTICS

FORCE TO ENGAGE AND DISENGAGE	N/A
CENTER CONTACT RETENTION FORCE	6 lbs MIN.
RECOMMENDED COUPLING TORQUE	N/A
COUPLING NUT RETENTION FORCE	N/A
DURABILITY	>500cycles

ENVIRONMENTAL PARAMETER

TEMPERATURE RANGE	-65 ℃~+165 ℃
THERMAL SHOCK	US MIL- STD 202, Meth. 107, Cond. B
VIBRATION	US MIL- STD 202, Meth. 204, Cond. B
SHOCK	US MIL- STD 202, Meth. 213, Cond. I
CLIMATIC CLASS	IEC 60068 65/165/21

* CUSTOMER OUTLINE DRAWING

UNLESS OTHERWISE SPECIFIED:
1) EDGES : C0.15 MAX ;
2) REMOVE ALL BURRS ;
3) SURFACE ROUGHNESS : Ra1.6 ;
4) UNITS : mm ;
5) DIMENSIONS TOLERANCES
DECIMALS : .x ±0.3 .xx ±0.2 .xxx±0.1;
ANGLES : ± 5°.

THIRD ANGLE PROJECTION

APPROVED :	CUSTOMER P/N : -
CHECKED :	SCALE : 1 : 1
DRAWING : ZXH	DATE : 2020-07-20
	PAGE : 1/1

SLK SUPERLINK

TITLE : HN FEMALE S/T CONNECTOR 50 Ω

DRAWING NO. : 5HNF11S-A00

COMPANY WEBSITE : www.slkcorp.com

CUSTOMER OUTLINE DRAWING